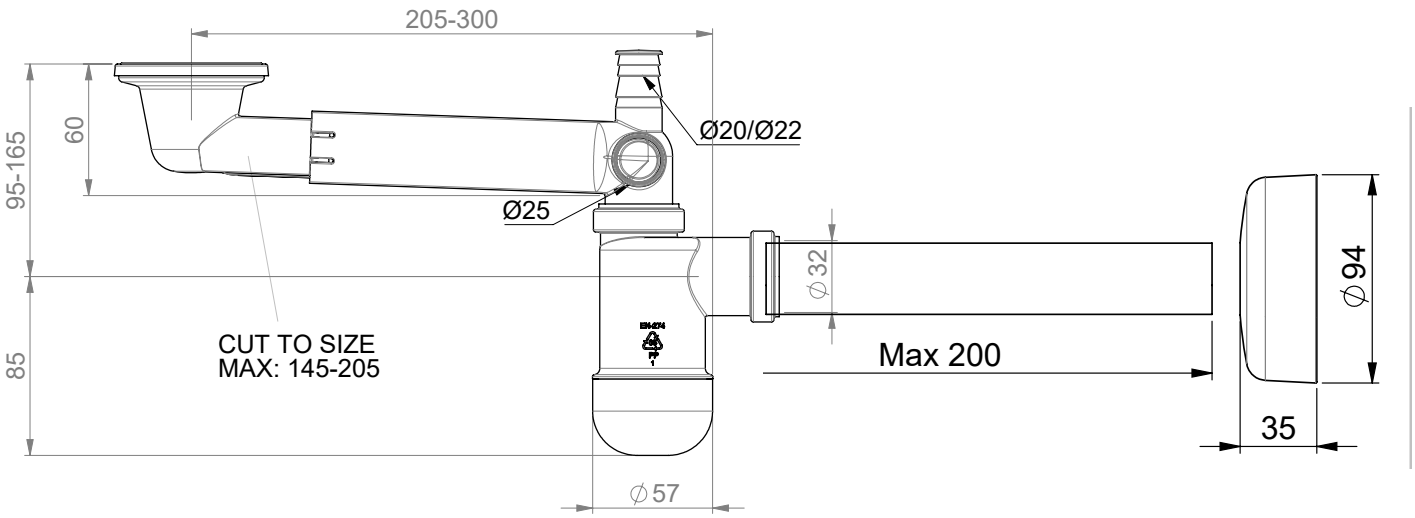
205-300
95-165
60
Ø20/Ø22
Ø25
CUT TO SIZE
MAX: 145-205
85
∅32
Max 200
∅94
35
∅57