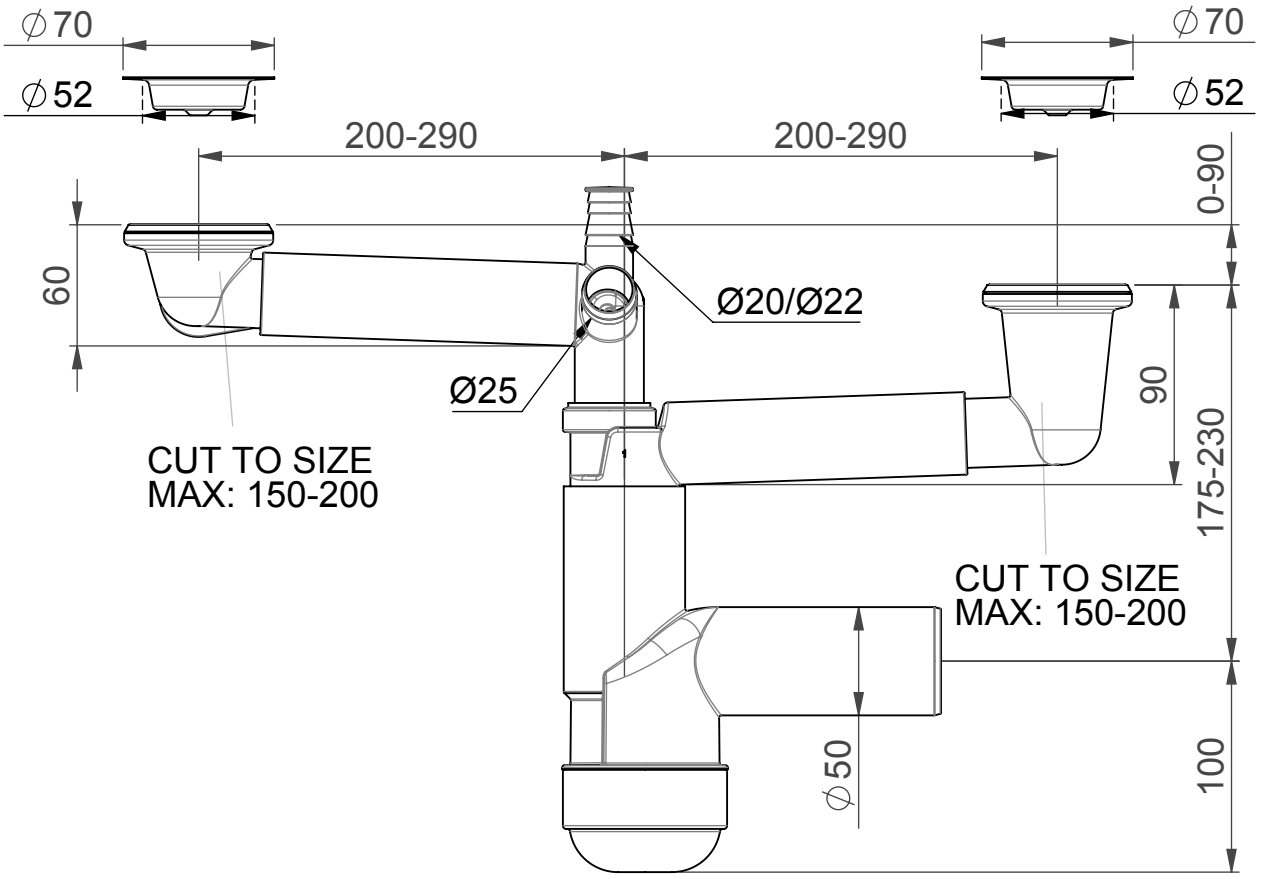
∅70
∅52
∅70
∅52
200-290
200-290
0-90
60
Ø20/Ø22
Ø25
90
175-230
CUT TO SIZE
MAX: 150-200
CUT TO SIZE
MAX: 150-200
∅50
100